ARISTON

SPARE PARTS EXPLODED VIEW
STORAGE ELECTRIC WATER HEATERS

Model

VELI TECH PW ABSE DRY

R8219269-01 - 14/06/2024

EN	FR	IT	ES	DE	NL

VELIS TECH PW ABSE DRY

Storage Electric Water Heaters

Col	Reference	Model type	Begin	End
1	3705049	VELIS TECH ABSE DRY 50	02-2024	-
2	3705050	VELIS TECH ABSE DRY 80	02-2024	-
3	3705051	VELIS TECH ABSE DRY 100	02-2024	-

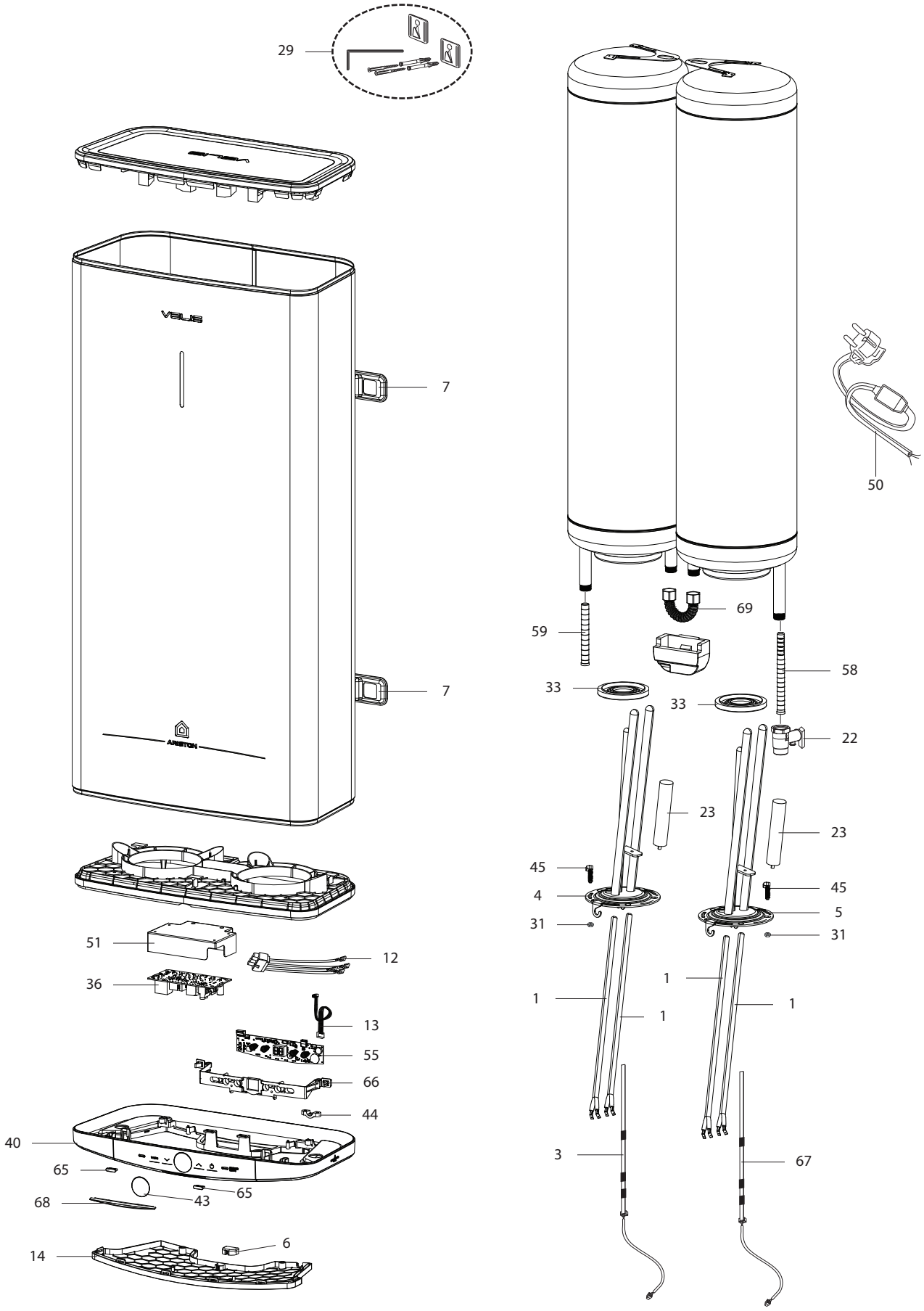
29
7
7
50
69
59
58
33
33
22
23
23
45
45
4
5
31
31
51
12
36
1
1
1
1
13
55
66
44
40
3
67
65
65
68
43
6
14

R8228053

	Description	Manf. Pt. N	Type	V. TECH PW DRY 50	V. TECH PW DRY 80	V. TECH PW DRY 100	4	5	6	7	8	9	10	11	12	13	14	15	16	17	18	From	to
0001	DRY HEATING ELEMENT 750W	6500785200		●	●	●																	
0003	WIRED NTC PROBE (OUTLET TANK)	65122529		●	●	●																	
0004	COMPLETE FLANGE 2 X 750W	65154946		●																			
	COMPLETE FLANGE 2 X 750W	65154948			●	●																	
0005	COMPLETE FLANGE 2 X 750W	65154947		●																			
	COMPLETE FLANGE 2 X 750W	65154949			●	●																	
0006	WATER DRAIN STOPPER	65180442		●	●	●																	
0007	SUPPORT BRACKET	65180461		●	●	●																	
0012	WIRING (ELEMENT / MAIN BOARD)	65154250		●	●	●																	
0013	WIRING (CONTROL BOARD)	65115286		●	●	●																	
0014	PLASTIC COVER	65180444		●	●	●																	
0022	SAFETY VALVE WITH LEVER (1/2” 8,5 BAR)	571730		●	●	●																	
0023	ANODE D:22 L:110 M5	65151186		●																			
	ANODE D:25,5 L:230 M5-M8	993014-01			●	●																	
0029	INSTALLATION KIT	65154451		●	●	●																	
0031	NUT M6	994140		●	●	●																	
0033	FLANGE GASKET	65150952		●	●	●																	
0036	P.C.B. (MAIN)	65116249		●	●	●																	
0040	BOTTOM BIG PLASTIC COVER	6500785600		●	●	●																	
0043	DISPLAY COVER	65180447		●	●	●																	
0044	CABLE CLAMP	573266		●	●	●																	
0045	SCREW M6X20	65151225		●	●	●																	
0050	POWER CABLE WITH ELCB (16A 1,0м)	65150965		●	●	●																	
0051	POWER BOARD BOX	65155810		●	●	●																	
0055	CONTROL BOARD	6500785300		●																			
	CONTROL BOARD	6500785400			●																		
	CONTROL BOARD	6500785500				●																	
0058	BAFFLE (1/2’’ H=159)	65152176		●	●	●																	
0059	BAFFLE (1/2’’ H=100)	65152177		●	●	●																	
0065	SIGNAL CAP	65180448		●	●	●																	
0066	HOLDER FOR CONTROL BOARD	65180446		●	●	●																	
0067	WIRED NTC PROBE (INLET TANK)	65122528		●	●	●																	
0068	LED INDICATOR	65180449		●	●	●																	
0069	BY-PASS CONNECTION	65154293		●	●	●																	

LIST OF THE ABBREVIATIONS

HW	: Hot water.
CW	: Cold water.
C	: Ceramic resistance (normal heating).
Ca	: Ceramic resistance (accelerated heating)
TP	: Immersion heater.
1F	: With fittings.
2F	: Without fittings.
3F	: With fittings and another outlet connection.
AMI	: With mixing valve.
SMI	: Without mixing valve.
PUISS	: Power of th appliance.
PN	: Appliance with normal pression.
LP	: Appliance with low pression.
PV	: Appliance with variable power.
PF	: Appliance with fixed power.

IDENTIFICATION PLATE

SERIAL NUMBER

6 Characters : 03 09 08
- Year of manufacture
- Manufacturing day
- Month of manufacture

9 Characters : 5 9 12 0606
- Year of manufacture
- Month of manufacture
- Sequencial number

14 Characters : SI-V-0B0 45 07 0001
- Sequencial number
- Year of manufacture : 6 → 2004, 7 → 2005, 8 → 2006, etc ...
- Month of manufacture : 25 → January, 13 → February, 32 → March, 35 → April, 39 → May, 45 → June, 43 → July, 29 → August, 40 → September, 38 → October, 51 → November, 12 → December
- Product model

14 Characters : 111518 XX 000010
- Month of manufacture
- Day of manufacture
- Sequencial number
- Year of manufacture

15 Characters : 02 11 00001 007843
- Year of manufacture
- Month of manufacture
- Product reference
- Sequencial number

21 Characters : 3200050 XX 08115 0000001
- Product reference
- Sequencial number
- Year (08) / Manufacturing day (115)

22 Characters : 3200050 XX 070115 0000001
- Product reference
- Sequencial number
- Year (07) / Month (01) / Manufacturing day (15)

The indications mentionned on the prices, commercial or technical literature and the scheme are written for your guidance and are available at a given time. The CONSTRUCTOR retains the power to modify the presentation, the form, the size, the conception or the material of the products.